Operation Manual for „COLDER“, Ultra-Cold Air Generator

Model No.	Working Air Pressure	Compressed-air Consumption	Compressor Hp	Connection Air Tube O. D.	I. D.
140-55 SV	3 – 7 kg/cm³	45 – 85 l/min.	0,5 – 1 hp	6 mm	4,0 mm or over
160-65 SV	3 – 7 kg/cm³	115 – 220 l/min.	2 – 3 hp	6 mm	4,0 mm or over
185-65 SV	3 – 7 kg/cm³	180 – 420 l/min.	3 – 5 hp	8 mm	5,5 mm or over
190-75 SV	3 – 7 kg/cm³	300 – 750 l/min.	5 – 10 hp	8 mm	5,5 mm or over

How to install a COLDER

1. Connect a compressed-air line with a COLDER. Prepare a nylon or urethane tube of O. D. 8 mm x I.D. 5,5 mm (or bigger) for 190-75 SV / 185-65 SV and a tube of O.D. 6 mm x I. D. 4 mm (or bigger) for 160-65 SV/140-55 SV. Fit one end of the tube to the connector of the COLDER firmly so that it will not come off. Fit the other end to ensure by pulling the tube that they are fully connected.
   The most suitable tube length is 2 m (or less) for 190-75 SV/185-65 SV and 1 m (or less) for 160-65 SV/140-55 SV. If it is longer, COLDER may not perform properly because the pressure of compressed-air supplied drops. When an air tubing is connected with a COLDER, care is to be taken that couplings to be used should have an inside diameter for the compressed-air passage of 5,5 mm minimum for 190-75 SV/185-65 SV and 4 mm minimum for 160-65 SV/140-55 SV. For connection of a compressor and a dryer/filter, a bigger inside diameter is recommended.

2. Be sure to install a filter-separator on a compressed-air supply line.

3. If a dryer is not installed on the compressed-air line, a measure to prevent freezing should be taken (See preventive measures against freezing given on the second page).

4. Install a COLDER in such a way that distance between the discharging outlet of cold air and an object to be cooled is 20 mm to 30 mm and that the object is directly exposed to cold air. If the distance is bigger, cold air required will not be obtained because warmer ambient air will mix with the discharged cold air and the temperature of cold air will rise.

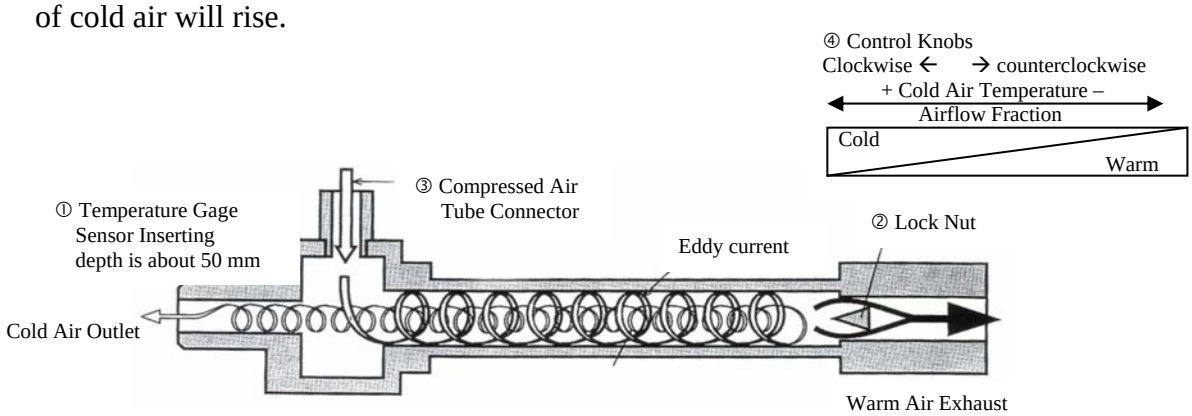

190-75 SV, 185-65 SV, 160-65 SV, 140-55 SV

How to adjustments

① Fit the sensor of temperature gauge (of a digital indication type) to the discharging outlet of cold air referring to the above diagram.

② Turn the lock nut counter-clockwise and loosen it completely. Then turn the control knob clockwise to the bottom dead center tightly.

③ Open the valve on the compressed-air line and let cold air flow into COLDER. At the same time check if the pressure gauge indicator is within working air pressure range given above.

④ While checking the temperature of cold air, turn the control knob slowly counter-clockwise and loosen it.

⑤ Temperature of discharged air will go down slowly but after attaining the lowest temperature, it will then go up. Stop turning the control knob in the position just before the temperature goes up.

⑥ When the control knob is set in the position as in ⑤, a maximum cooling is obtained. If you choose a maximum cooling effect rather than the lowest temperature, approximately 2 turns of the knob will do the job. But, the cold air temperature will be higher than the lowest temperature in that case.

* When the pressure of supplied compressed-air changes, take ① to ⑥ steps again for adjustment.

How to check a COLDER when it fails to produce cold air

- Is there any trouble with air tubing line?
  1. <u>Check whether there is a trouble in the compressed-air line.</u>
     1) Air does not have a sufficient pressure.
        In this case, you cannot expect cold air because of lack of spouting air speed for heat separation.
        All models need air pressure of 3 kg/cm³ or more
     2) The air tube is too small in inside diameter or too long.
        In this case, air pressure will drop because of insufficient air flow.
        Tubes to be installed are:

For 190-75 SV/185-65 SV:	Inside diameter should be 5,5 mm or larger (usually 8 x 6 mm) with length 2 m or shorter
For 160-65 SV/140-55 SV:	Inside diameter should be 4,0 mm or larger (usually 6 x 4 mm) with length 1 m or shorter

  3) The inside diameter of tubing or couplings has become smaller.
     For the above-mentioned reason, use tubing with ¼´´ or larger inside diameter. If couplings are used on the air tubing line, ensure that orifice satisfies the following:

For 190-75 SV/185-65 SV:	Minimum bore 6,0 mm
For 160-65 SV/140-55 SV:	Minimum bore 4,0 mm

- Is not moisture in the air frozen?

If the temperature of discharged air is set blow (-) 10° C, moisture in compressed-air will freeze in a COLDER and it will cause an intermittent discharge of cold air.

- Is an air-dryer installed? (See the “A” and “B” blow.)

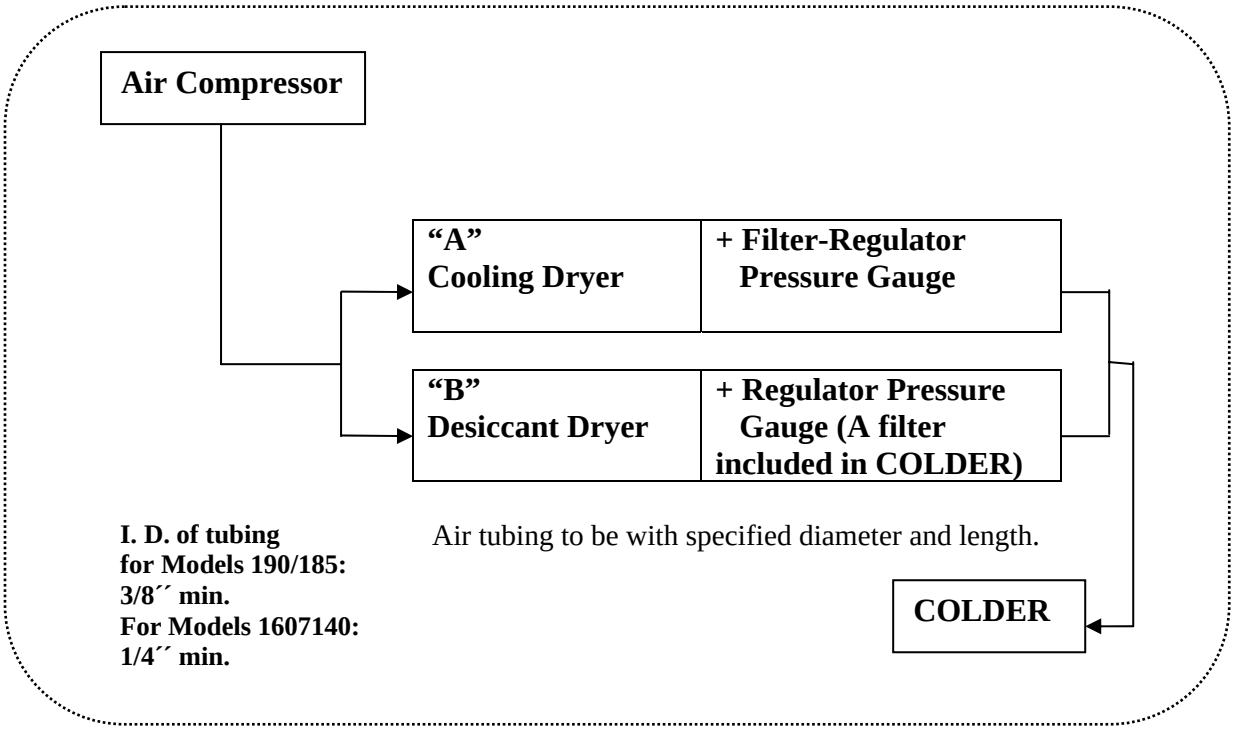

Be sure to check if an air-dryer is installed on the air-tubing line and we recommend you to use our desiccant type FILENCO DRYER/FILTER that will bring you ultra-low dew point. It is easy to install and most economical.

- Is not dust, oil or any other stuff solidified inside your COLDER?
  1) Do not fail to install a filter-separator on compressed-air line. If such stuff has clogged up in the COLDER, purge it with air from discharging outlet of COLDER.
  2) When oil or grease is solidified inside, it can be washed out.

Troubles.
A COLDER has no working parts, which should bring you no trouble under normal operation. But, if it gives you any trouble due to manufacturing imperfection, please send it back to us without disassembling it. We will not be responsible when it is disassembled.

KAGER GmbH
Industrieprodukte

Paul-Ehrlich-Str. 10 A – D-63128 Dietzenbach
Tel. ++49-(0)6074-40093-0 – Fax ++49-(0)6074-40093-99
E-mail: info@kager.de – Internet: www.kager.de